REV.	DESCRIPTION	DATE	DRAFTER	APPROVER
V1.0	DWG.REL	2020.11.27	ZHANG	JIN
V2.0	Structural change	2023.8.4	ZHANG	JIN
V3.0	2-5 Poles Increase structure	2023.12.15	ZHANG	JIN

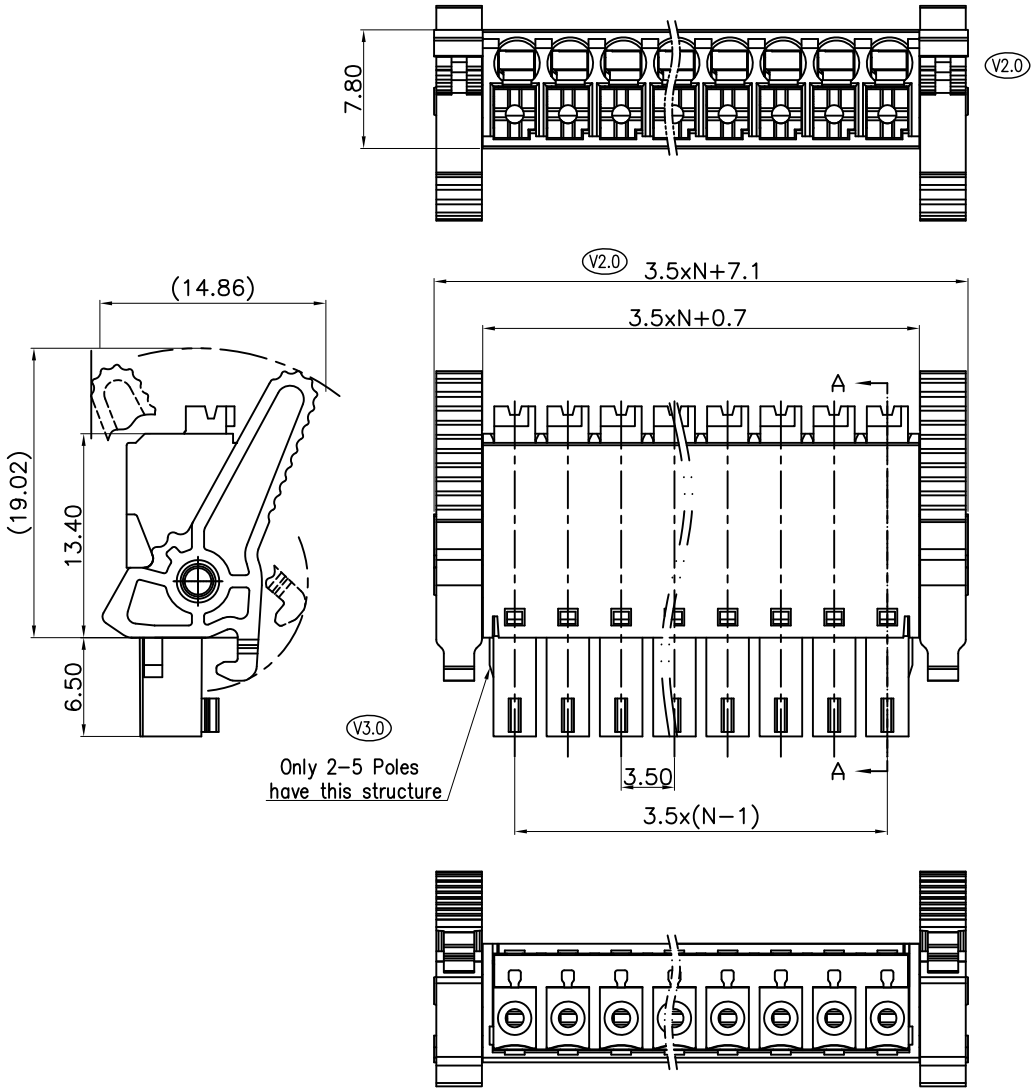

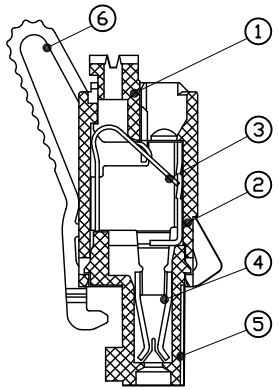

SECTION A-A

- Material
  - ①Button : PA66, UL94V-0
  - ②Housing : PA66, UL94V-0
  - ③Reed : Stainless steel
  - ④Contact : Copper alloy,Tin plated
  - ⑤Cover : PA66, UL94V-0
  - ⑥Spanner : PA66, UL94V-0
- Electrical

	UL	IEC
Rated voltage :	300V	320V
Rated current :	10A	17.5A

  Contact resistance : 20mΩ(Max)
  Insulation resistance: 500MΩ/DC500V
  Withstanding Voltage : AC1600V/1min
  Wire range: 26-16AWG 0.14-1.5mm²
- Mechanical
  Operating temperature:-40℃∽+105℃
  Soldering temperature:250℃±5/5sec
  Strip length: 8-9mm
- Conform to REACH and RoHS

HOW TO ORDER

2KF003F-3.5-XXP-1 X-XXXXX

- 2KF003F → MODEL
- 3.5 → Pitch:mm
- XXP → No.of poles: 2~24P
- 1 → 1:Single Pitch, 2:Double Pitch
- X → Color: G:Green, R:Red, K:Black, W:White, O:Orange, B:Blue, GR:Gray
- XXXXX → Customer Request

Pitch range			Nominal dimension range					
>0 ~ 6	>6 ~ 10	>10 ~ 24	>0 ~ 30	>30 ~ 60	>60 ~ 100	>100 ~ 150	>150	0.1/10
±0.15	±0.20	±0.30	±0.30	±0.50	±0.70	±1.00	±1.30	±2°

DRAWING TYPE	CUSTOMER DRAWING		
SCALE	1:1	SHEET	1 OF 1
DRAWING NO.	W10002112		

PROJECTION		TITLE	2KF003F-3.5-XXP-1X
UNIT	mm		
SHEET SIZE	A4	SERIES	2KF003

® 慈溪市凯峰电子有限公司
CIXI KAIFENG ELECTRONICS CO.,LTD