REV.	DESCRIPTION	DATE	DRAFTER	APPROVER
A1	DWG.REL	2020.5.18	ZHANG	JIN

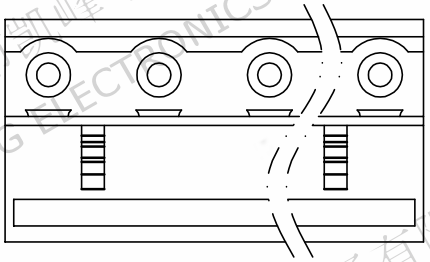

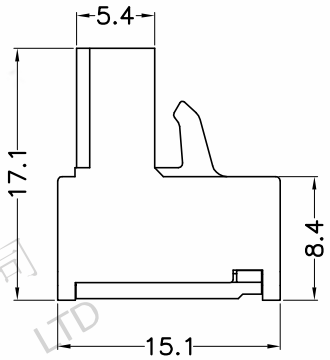

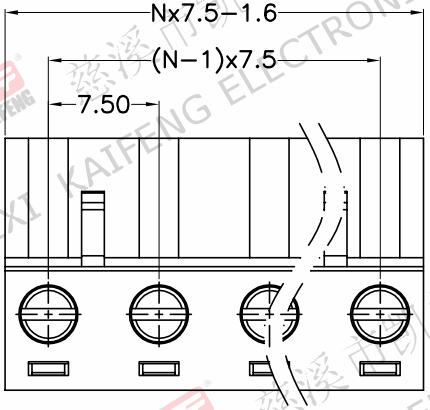

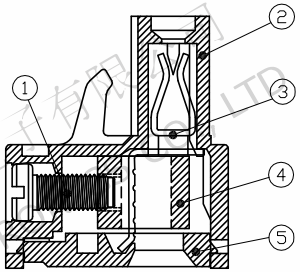

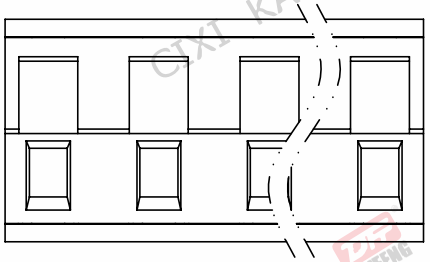

- Material
  - ①Screws : M3.0 steel, Zinc plated, "−" slot type
  - ②Housing : PA66, UL94V−0
  - ③Contact : Copper alloy,Tin plated
  - ④Clamp : Copper alloy, Ni plated
  - ⑤Cover : PA66, UL94V−0

- Electrical

	UL	IEC
Rated voltage :	300V	400V
Rated current :	15A	20A

  - Contact resistance : 20mΩ(Max)
  - Insulation resistance: 500MΩ/DC500V
  - Withstanding Voltage : AC2500V/1min
  - Wire range: 28−12AWG 2.5mm²

- Mechanical
  - Operating temperature:−40℃∽+105℃
  - Soldering temperature:250℃±5/5sec
  - Torque: 0.5N.m (4.43Lb.in)
  - Strip length: 7−8mm

- RoHS compliance

HOW TO ORDER

KF2EDG−X−7.5−XXP−1 X−XXXXX

- MODEL
- Pitch:mm
- No.of poles: 2~24P
- 1:Single Pitch 2:Double Pitch
- Color: G:Green R:Red K:Black W:White O:Orange B:Blue GR:Gray
- Customer Request

Pitch range			Nominal dimension range						
>0 ~ 6	>6 ~ 10	>10 ~ 24	>0 ~ 30	>30 ~ 60	>60 ~ 100	>100 ~ 150	>150		0.1/10
±0.15	±0.20	±0.30	±0.30	±0.50	±0.70	±1.00	±1.30		±2°

DRAWING TYPE	CUSTOMER DRAWING		
SCALE	1:1	SHEET	1 OF 1
DRAWING NO.	W10000072		

PROJECTION		TITLE	KF2EDG−X−7.5−XXP−1X
UNIT	mm		
SHEET SIZE	A4	SERIES	KF2EDG−X

慈溪市凯峰电子有限公司
CIXI KAIFENG ELECTRONICS CO.,LTD